DS6R116FX000003

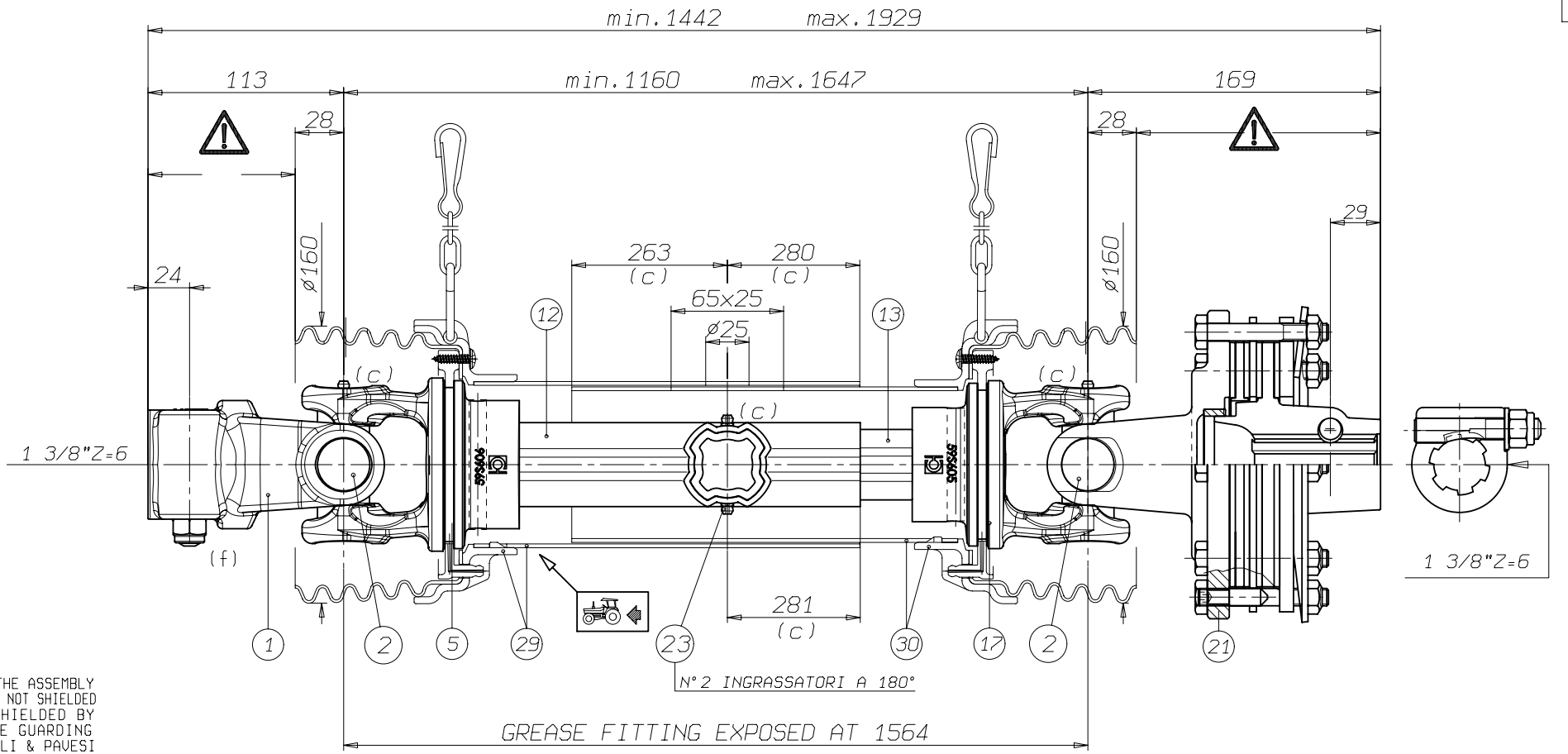

WARNING!

SECTIONS ⚠ OF THE ASSEMBLY MARKED ⚠ ARE NOT SHIELDED AND MUST BE SHIELDED BY AN INTERACTIVE GUARDING SYSTEM. BONDIOLI & PAVESI DECLINES RESPONSIBILITY IF PROPER GUARDS ARE NOT PROVIDED OR MAINTAINED.

	Pos.	Cod. C.E.D.	Descrizione
(c)	30	5662G9085	L= 979 (13825)
(c)	29	5661G9104	L= 979 (13826)
(c)	23	348018000	
(b) (d)	21	661G53E03R	FV34R 1450Nm
	17	204S66854	
(a) (g)(e)	13	2453N1025	L=1025 (12244-R)
(c)	12	237D03Q28	L=1005 (12246)
	5	204S66853	
(c)	2	412OG0012	
(f)	1	5090G0361	

MODIFICHE - MODIFICATIONS - ANDERUNGEN - MODIFICACIONES

d	ERA 6JG754003 1500Nm (pos.21)	04/04/05 MAGOTTI
e	ERA 237D03N34.	06/09/05 BONINI
f	ERA FORC. 5090G0353	27/06/06 MORETTI
g	ERA 2453N1020 L=1020	06/11/2008 MORETTI
		02/02/04 SPENNATO

TIPO-TYPE TYP: S6

CLIENTE / CLIENT / CUSTOMER / KUNDE: 4600160 BYPY HYDRAULICS & TRANSMISSIONS LTD

TIPO DI MACCHINA / TYPE DE MACHINE / TYPE OF IMPLEMENT / MASCHINENTYPE

GIRI : n= 760

STUDIO TRS60116001

ORIGINE DS6R116FX000001

NOTE :

Accop. MINIMO telescop. 477 (c)
Accop. MINIMO protezione 461

RIF.CLIENTE / REF.CLIENT / CUSTOMER REF. / BEZUG KUNDE

DATA 23/03/02

DISEGNATO P.Pedroni

SOSTITUISCE

BONDIOLI & PAVESI

COD. C.E.D. DS6R116FX000003/g

VIETATE LE RIPRODUZIONI NON AUTORIZZATE TOUTE REPRODUCTION NON AUTORISEE EST INTERDITE REPRODUCTION NOT PERMITTED NICHT GENEHMIGTE VERVIELFAELTIGUNGEN SIND UNZULAESSIG PROHIBIDA LA REPRODUCCIÓN NO AUTORIZADA